Keister X-ray/photo diode

Diode: Hamamatsu S3590-09 (10x10 active area, 300 um thickness)

Window: Carbon Foil (flexible graphite) purity: 99.8%, thickness 0.075 mm, (Goodfellow 028-617-82)

Connector: LEMO 00 plug

Enclosure: ABS (3D printed)

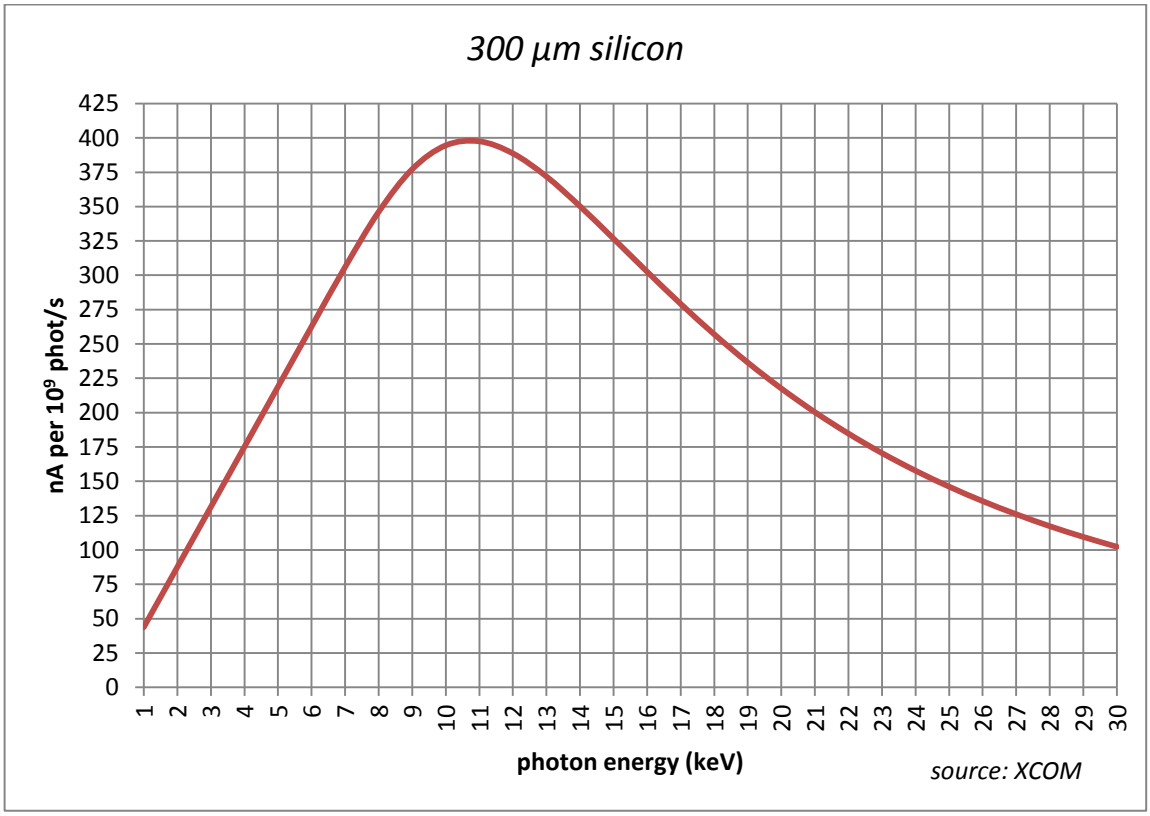

Drawings:

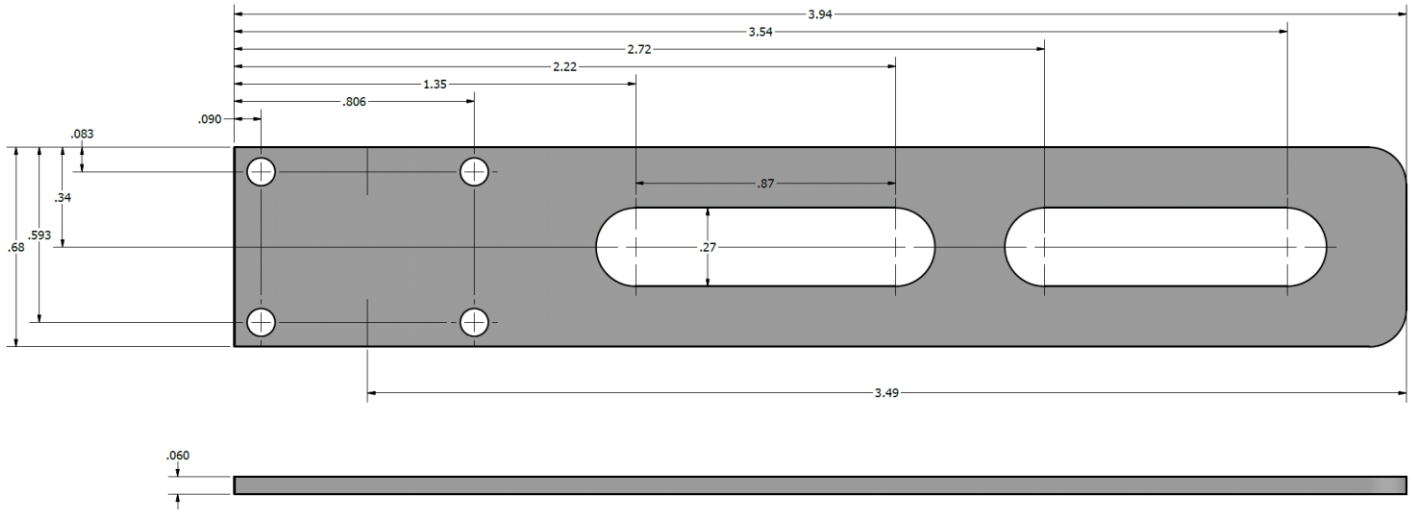
3.94
3.54
2.72
2.22
1.35
.806
.090
.083
.34
.593
.68
.87
.27
3.49
.060

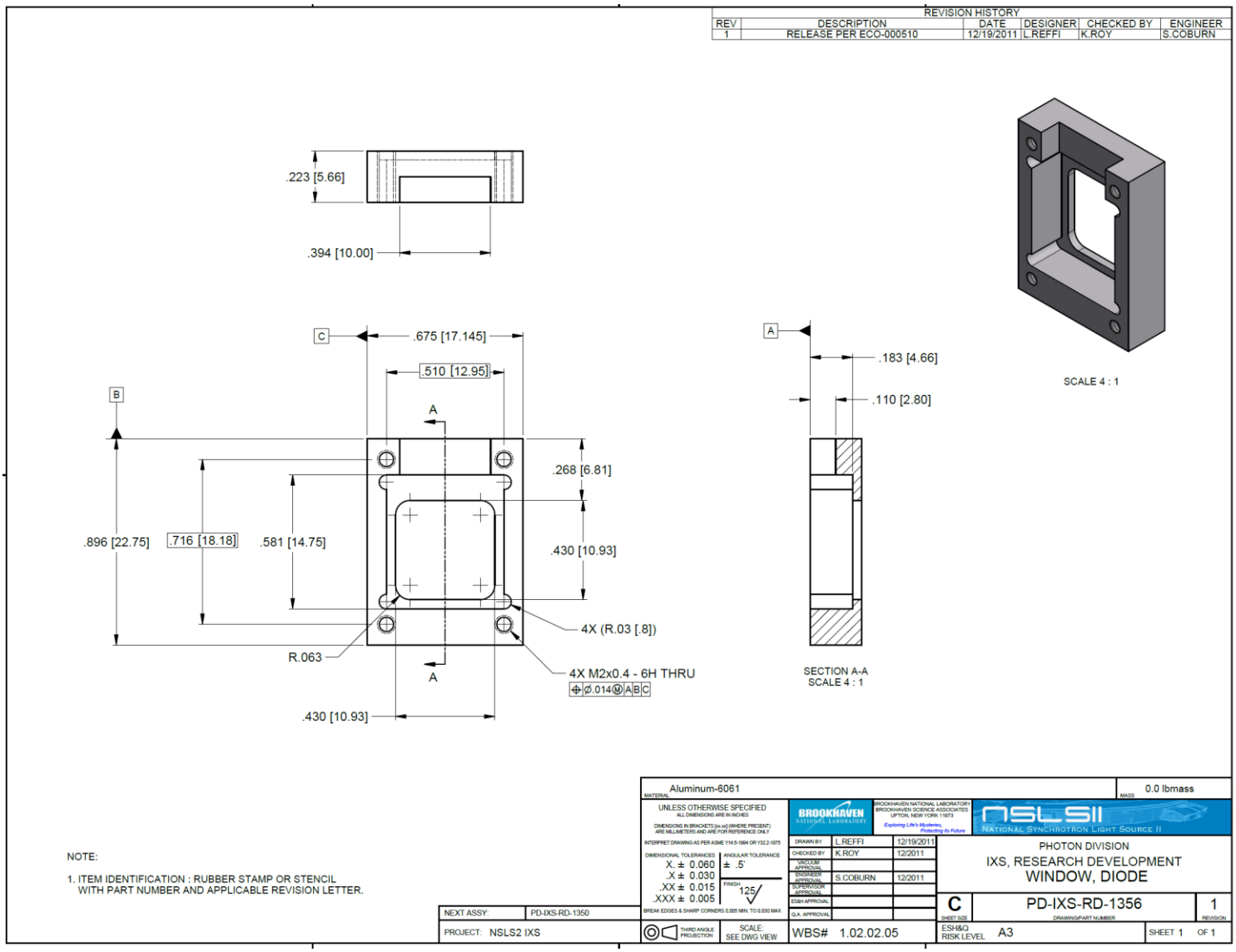
REVISION HISTORY
REV | DESCRIPTION | DATE | DESIGNER | CHECKED BY | ENGINEER
1 | RELEASE PER ECO-000510 | 12/19/2011 | L.REFFI | K.ROY | S.COBURN
.223 [5.66]
.394 [10.00]
.675 [17.145]
.510 [12.95]
.896 [22.75]
.716 [18.18]
.581 [14.75]
.268 [6.81]
.430 [10.93]
4X (R.03 [.8])
R.063
4X M2x0.4 - 6H THRU
Ø.014 M A B C
.430 [10.93]
.183 [4.66]
.110 [2.80]
SECTION A-A
SCALE 4 : 1
SCALE 4 : 1
NOTE:
1. ITEM IDENTIFICATION : RUBBER STAMP OR STENCIL
WITH PART NUMBER AND APPLICABLE REVISION LETTER.
Aluminum-6061
MATERIAL
0.0 lbmass
MASS
UNLESS OTHERWISE SPECIFIED
ALL DIMENSIONS ARE IN INCHES
DIMENSIONS IN BRACKETS [xx.xx] (WHERE PRESENT) ARE MILLIMETERS AND ARE FOR REFERENCE ONLY
INTERPRET DRAWING AS PER ASME Y14.5-1994 OR Y32.2-1975
DIMENSIONAL TOLERANCES
X. ± 0.060
.X ± 0.030
.XX ± 0.015
.XXX ± 0.005
ANGULAR TOLERANCE
± .5°
FINISH
125
BREAK EDGES & SHARP CORNERS 0.005 MIN. TO 0.030 MAX
BROOKHAVEN NATIONAL LABORATORY
BROOKHAVEN NATIONAL LABORATORY
BROOKHAVEN SCIENCE ASSOCIATES
UPTON, NEW YORK 11973
Exploring Life's Mysteries, Protecting its Future
NSLSII
NATIONAL SYNCHROTRON LIGHT SOURCE II
DRAWN BY L.REFFI 12/19/2011
CHECKED BY K.ROY 12/2011
VACUUM APPROVAL
ENGINEER APPROVAL S.COBURN 12/2011
SUPERVISOR APPROVAL
ESH APPROVAL
Q.A. APPROVAL
PHOTON DIVISION
IXS, RESEARCH DEVELOPMENT
WINDOW, DIODE
C
SHEET SIZE
PD-IXS-RD-1356
DRAWING/PART NUMBER
1
REVISION
NEXT ASSY: PD-IXS-RD-1350
PROJECT: NSLS2 IXS
THIRD ANGLE PROJECTION
SCALE: SEE DWG VIEW
WBS# 1.02.02.05
ESH&Q RISK LEVEL A3
SHEET 1 OF 1
f:\Mech-Fnd\ TIP\IXS\RP\PD-IXS-RD-1356.dwg